Safe Bedside Sleeper Stand-Alone Unit

Eileen Clemens
Neha Dhawan
Larisa Ensign
John Powers

ME 450: Design and Manufacturing III – Fall 2007
Professor Jwo Pan

December 11, 2007

TABLE OF CONTENTS

ABSTRACT

Co-sleeping, sleeping with a baby nearby, is gaining popularity in the United States. Our task is to research incident data and identify the likely hazards that exist with current stand-alone bedside sleeper units on the market. Once we have determined the most likely hazards, we are going to make suggestions for what should be addressed in any new performance standard. We will then redesign a prototype Arms' Reach Co-Sleeper that minimizes exposure to these hazards, and is attractive and affordable.

INTRODUCTION

In a study of 321 Sleeping Induced Death Syndrome (SIDS) cases, the British Medical Journal indicated that the largest percentage of SIDS cases came from solitary sleepers (sleeping in a different room than the parents), Figure 1 below. They suggested that bed sharing for a short time for the purpose of breast feeding or comforting the child did not increase the risk of SIDS, but rather reduced the risk of SIDS.

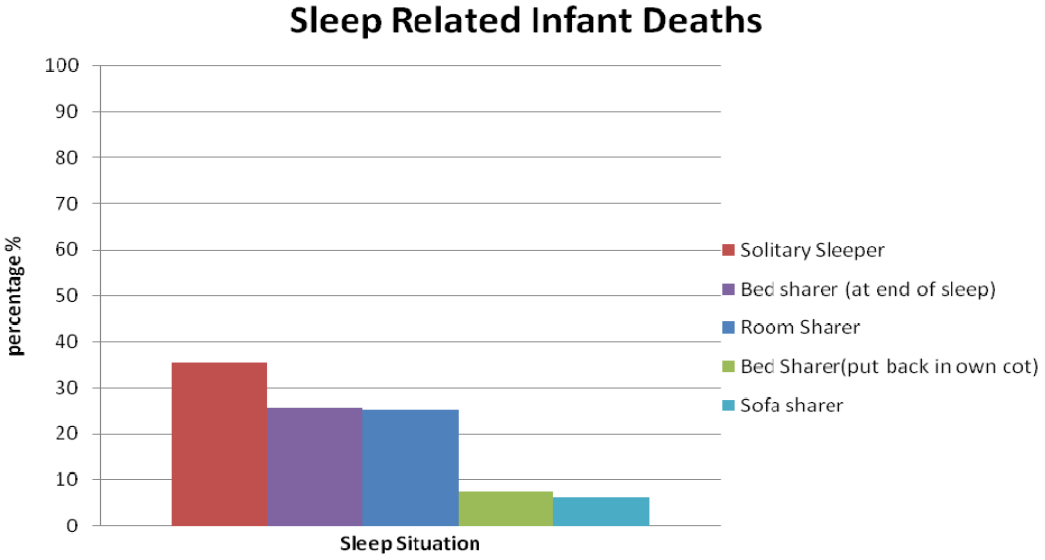

Figure 1: This figure shows that sleep related infant deaths occur primarily amongst children who sleep in separate bedrooms than their parents.

Kids In Danger (KID) is a nonprofit organization dedicated to protecting children by improving children's product safety. It was founded in 1998 by Mr. and Mrs. Boaz Keysar after the death of their son Danny. Danny died in his child care home when a portable crib collapsed around his neck. The crib that killed Danny had been recalled five years earlier and notice of its danger had not reached Danny's parents, caregiver, or state inspector. Investigation showed that the product had not been adequately tested for safety before it was sold.

The National Society of Professional Engineers' Code of Ethics states a promise to "hold paramount the safety, health, and welfare of the public." However, not all products are tested before they hit the market. Hazard analysis and risk prevention is rarely taught, despite the

devastating outcome it can have. The purpose of this project is to identify hazards associated with bedside sleeping products. Cribs, bassinets, and portable cribs all have standards to guide manufacturers in making a safe product. But, since bedside sleepers are relatively new, there are no such standards for them. For this project, our team has reviewed incident data for bedside sleepers currently on the market and in other types of sleep environments such as standard cribs. Using this information, we have identified possible hazards associated with bedside sleeping products. We are going to create a prototype to reduce those hazards while still being an attractive product to consumers.

INFORMATION SEARCH

In order to design a safe and modified bedside sleeper it was necessary to determine the required safety standards. Thus far, there are no safety standards for bedside sleepers; however the American Society for Testing and Materials (ASTM) and Consumer Product Safety Commission (CPSC) have determined a set of safety standards for full size and non-full-size cribs. Additionally, a number of consumer preferences were determined through a survey in order to determine which customer preferences to address when designing our prototype.

ENGINEERING SPECIFICATIONS

The CPSC has set standards for non-full-size cribs and for full-size cribs (Title 16 Parts 1509 and 1508, respectively). Using this information, manufacturers are able to produce safer sleeping environments. These standards and general information from our sponsor allowed us to determine the engineering specifications shown in Table 1 below. Wall height, partial or full, refers to the height of the wall that is up against the bed. The force standards refer to pounds per square area that must be applied to a handle, as well as the force applied by the weight of the baby on the structure as a whole. The mattress area is the dimensions meeting standards and not allowing for any gaps that could cause a hazard. The distance between the bedside sleeper and the parents' bed can create hazards and must be addressed. Mattress firmness has to do with the fact that infants can suffocate on the mattress if it is too soft. If an infant rolls over onto their stomach, they cannot lift their head and therefore need a firm mattress to prevent their airways from being blocked. The hardware corresponds to the fasteners and other materials used in assembly, the structural integrity of the product. The total number of walls means either 4 stationary walls or 3 stationary walls with a partial wall or adjustable wall as the fourth wall between the child and the parents. Fatigue and yield strength determine how much weight the bedside sleeper can hold.

Wall height	10 inches
Meets Force Standards	>10 lbs to release wall
Mattress Area	34 inches x 20 inches
Distance of co-sleeper to bed	0 inches
Mattress Firmness	0 inches of deflection
Material	Thermo-set plastic Cotton Extruded steel
Hardware	Ball catch Press fit fasteners, screws
Assembly	Pre-assembled
Number of Walls	4
Total Weight	< 25 lbs
Modulus of Elasticity	3.0×10^{7} psi

Table 1: Engineering Specifications

CUSTOMER REQUIREMENTS

The customer requirements are shown in our QFD in Appendix A, page 34. Understanding parents' preferences can be used to develop a safer, yet still convenient sleeping arrangement for newborns and infants. In addition to researching the tendencies of cultures, we generated and distributed a survey for future and current mothers to determine their preferences in a bedside sleeper. In the survey, Table 2, parents were asked to weigh their preferences on a scale of 1-10 (10 being the highest preference) for each listed preference.

Preference	**Weight***
Mobility	6
Storage Compartments	2
Accommodating Larger Age Range	2
Close Proximity to Parent	9
Adjustable Leg Height	9
Safe from Pet Entrance	4
Collapsibility	6
Multi-Purpose (playpen, bench, etc.)	1
Ease of Use	9
Ease of Assembly	10
Divider Wall (between bedside sleeper and bed)	8
Locking Device Safety	9
Aesthetically Pleasing	4
Affordable	5
Durable	4
Safe from SIDS	8
Accommodating Multiple Children	5

Table 2: Customer Requirements

POTENTIAL HAZARDS

The bedside sleeper is a relatively new product when compared to a crib or a bassinet. Thus, the hazards that are associated with it have not yet been identified and this is where the information gaps exist. There are many structural and functional similarities between bassinets, cribs, and bedside sleepers that have helped us to determine many of the hazards.

The walls need to be high enough to keep the child in but low enough so that the parents can place the child in the product from bed. Also, pets can possibly enter through the open top. The biggest area for hazards seems to be the wall that connects the co-sleeper to the parent's bed. Since it is shallow, it could allow the child to exit and also allow sheets from the parent's bed to enter. Another potential hazard is the mechanism which connects the bedside sleeper to the parent's bed. If this is not secure, the bedside sleeper could roll away. The mattress needs to be firm to prevent suffocation.

Bedside sleepers are geared towards people who not only have a personal preference to keep their baby close-by, but also for mothers who have had Caesarian Sections (C-section). This situation puts both the mother and child at risk if the mother is unable to safely transfer the child to and from the bedside sleeper.

CONCEPT GENERATION

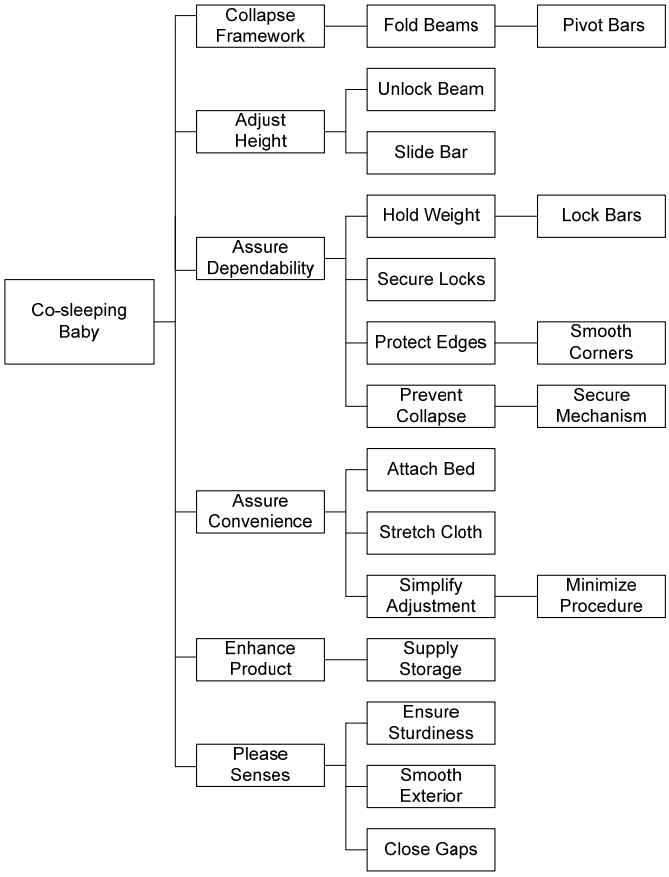

Figure 2: Functional Analysis System Technique (FAST) diagram.

The basic functions listed in the Functional Analysis System Technique (FAST) diagram in Figure 2 on page 6, were determined primarily from the functions already set for the Mini Co-Sleeper® made by Arm's Reach®. Their product was designed to allow an infant to sleep in a bassinet secured to the parents' bed. The purpose of this, like all other bedside sleepers is to allow for newborn infants to safely sleep within reach of its parent's care.

The Mini Co-Sleeper® was also designed to be folded up when necessary to allow for easy transportation when needed. Thus, one of the basic functions of a bedside sleeper is to have a collapsible framework accomplished with foldable beams and bars that pivot. This feature is already present in the Mini Co-Sleeper® and will be preserved in our redesigned crib.

Another feature that is already present in the Mini Co-Sleeper® is an adjustable wall. The purpose of this adjustable wall is to allow the parent to have easy access to the baby when the parent is lying in bed. It is advised however, that the infant is not to be left in the unit without the top horizontal rail set at its highest position, unless the parent is sleeping adjacent to it. Currently, there are multiple steps to convert from a free standing bassinet to a bedside sleeper bassinet. These steps include:

1. Unlock the bedside bottom bar by pulling upward on the center of the bottom bar.
2. Unlock the adjustable wall by releasing the lock in the center of the top bar.
3. While pushing the locking tab inward on the plastic connector pieces at each end of the top bar, slide each end upwards.
4. Secure each end of the bar in the lowered track position.
5. Lock both the top and bottom bars.
6. Secure any loose fabric with straps.

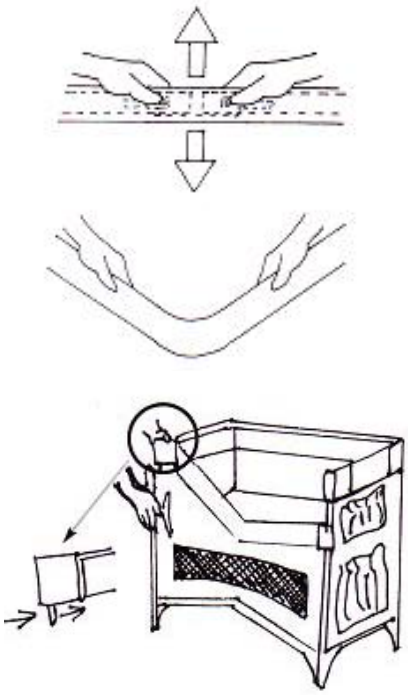

Figure 3: Method by which current wall is adjusted

Though the adjustable wall does function properly in the current design, the multiple steps to the adjustment mechanism are very inconvenient. We would like to preserve this feature of the bassinet while designing a mechanism that is more convenient for the parent. Ideally, it would function by unlocking the bar, sliding it along a track, and relocking it in the lowered/uppermost position.

With this new mechanism, it is necessary that the bassinet still remain dependable. With implemented safety features, the new mechanism must be designed to still hold the weight of an infant. This can be ensured with a secure locking mechanism that creates a rigid framework of beams that prevents any possibility of collapse. Additionally, the new mechanism must maintain a design that has rounded edges similar to what is currently being used.

Other features further add to the convenience of the bedside sleepers. The existing attachment mechanism secures the bassinet with a plastic plate that fits between the parents' mattress and box spring, and has two straps for attachment. This adds to the convenience by making the Mini Co-Sleeper® a safe product which can be attached securely to the parents' bed. The current design requires excess fabric that remains while the rail is in its lowered position to be secured with straps and clips. This is a very inconvenient step which can be eliminated by using an elastic material that stretches to the upper most position and retracts to the lowered position. Lastly, our new mechanism will enhance the product and please senses by maintaining the storage space, closing any hazardous gaps, smoothing out all rough edges and ensuring a stiff framework.

Function	Concept 1	Concept 2	Concept 3	Concept 4	Concept 5	Concept 6
Fold Beams	Clear adjustment mechanism and existing beam	Existing pin support	Pivoted Beams	Hinges		
Unlock Beam	Peg/Spring lock requiring a total of 10lbs to unlock	Hook and track mechanism	Ball Catch Mechanism			
Slide Bar	Track with bearings	Slider track	Lubricated slider track	Crank Mechanism		
Hold Weight	Pack 'n' Play mattress support	3 pole mattress support	Snap Straps			
Secure Locks	Keep current locking mechanism	Require 10lbs to unlock	Two separate motions	Two separate motions and locking mechanism		
Protect Edges	PVC with rounded edges	Velcro cover over exposed parts				
Prevent Collapse	Rigid beams	Existing Locking Mechanism				
Attach Bed	Plate with strap attachment					
Eliminate Excess Fabric	Spandex fabric in replace of wall	Fastened fabric using straps and buckles				
Simplify Adjustment	Fold out wall	Drop down wall with crank	Drop down wall with slider	Spring loaded peg	Spring loaded ball catch	Zip-up fabric wall
Supply Storage	Keep current storage supply					
Ensure Sturdiness	Use PVC	Use metal hardware				
Smooth Exterior	Sand rough portions where appropriate	Rounded edges	House moving parts			
Close Gaps	Velcro fabric cover	Small gap tolerances				

The morphological chart in Figure 4 was designed to organize all of the necessary design features and possible concept solutions for each design function. The highlighted portions of the chart indicate selected design features.

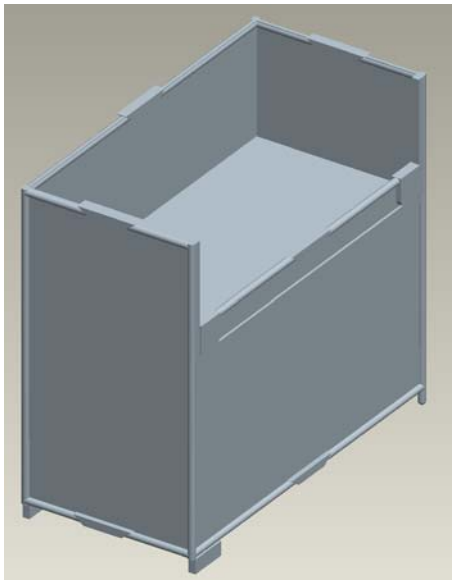

Figure 5: Original Co-Sleeper Design

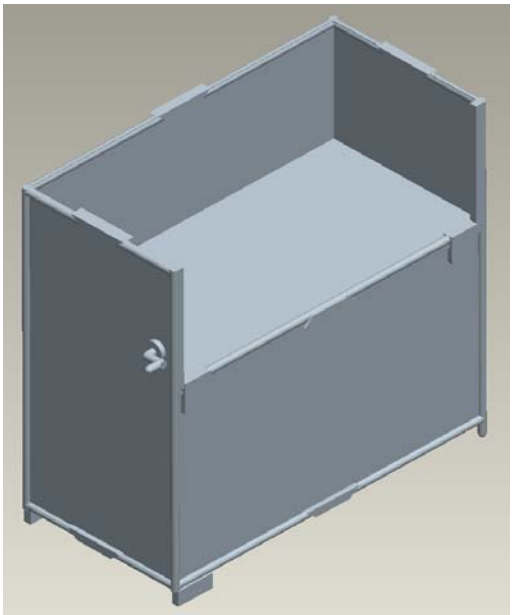

Figure 6: Concept 1 – Slide Down Wall with Crank Mechanism

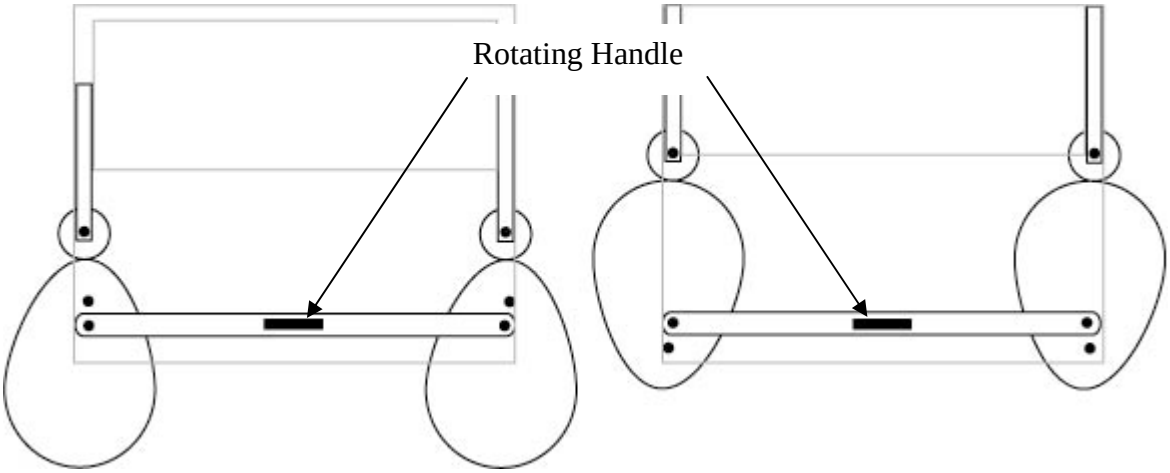

Figure 7: Concept 2 - Cam design to generate a vertical motion. The gray lines represent the edges of the original Mini Co-Sleeper® design by Arm's Reach. Due to the size of the cam required to produce the vertical motion with the necessary height, using this design was infeasible.

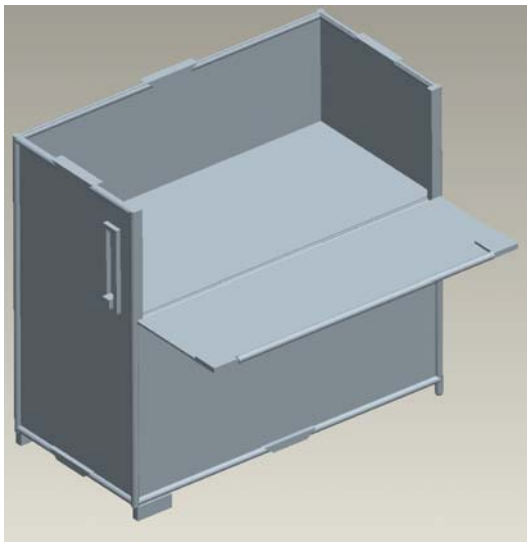

Figure 8: Concept 3 – Fold Out Slat Wall

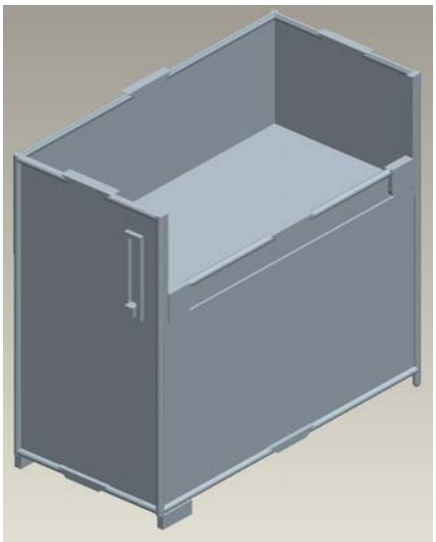

Figure 9: Concept 4 – Slide Down Wall

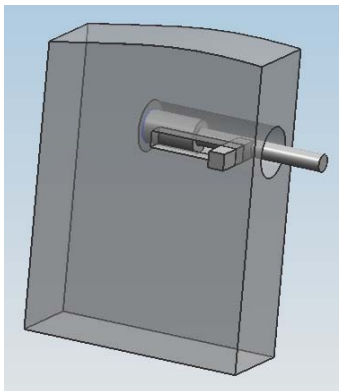

Figure 10: Concept 5 – Peg in Housing with Pin Lock

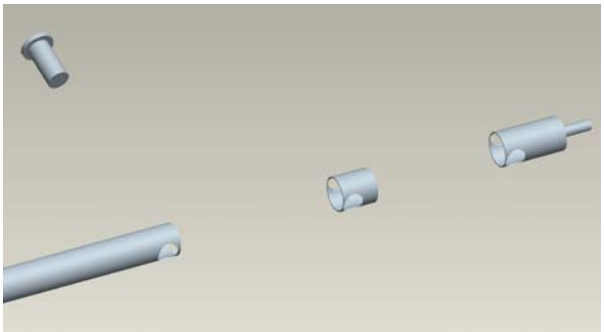

Figure 11: Concept 6 – Peg in Bar with Pin Lock

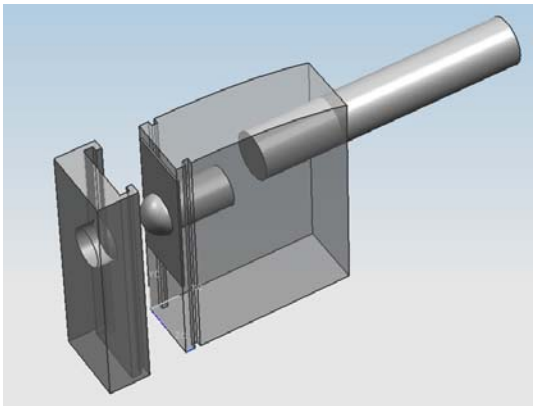

Figure 12: Concept 7 – Ball Catch Mechanism

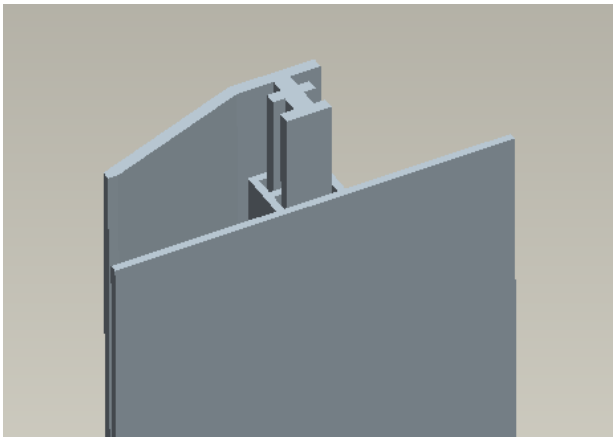

Figure 13: Concept 8 – Slider Track Mechanism

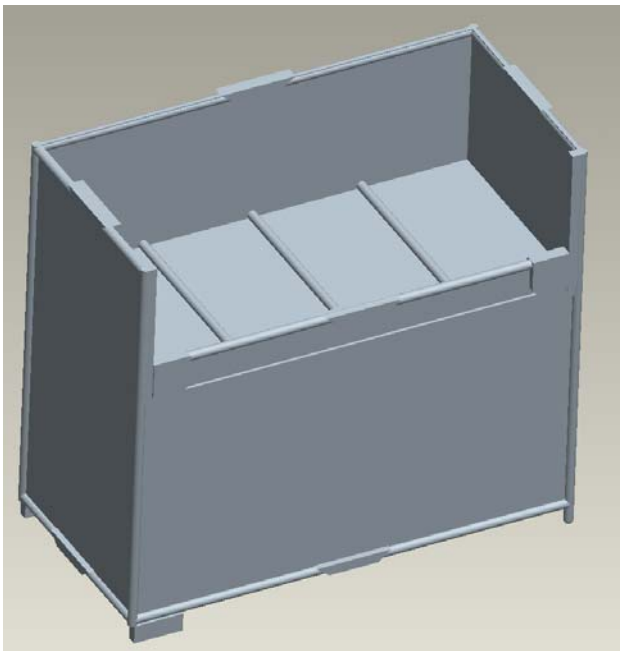

Figure 14: Concept 9 – Mattress Support Mechanism

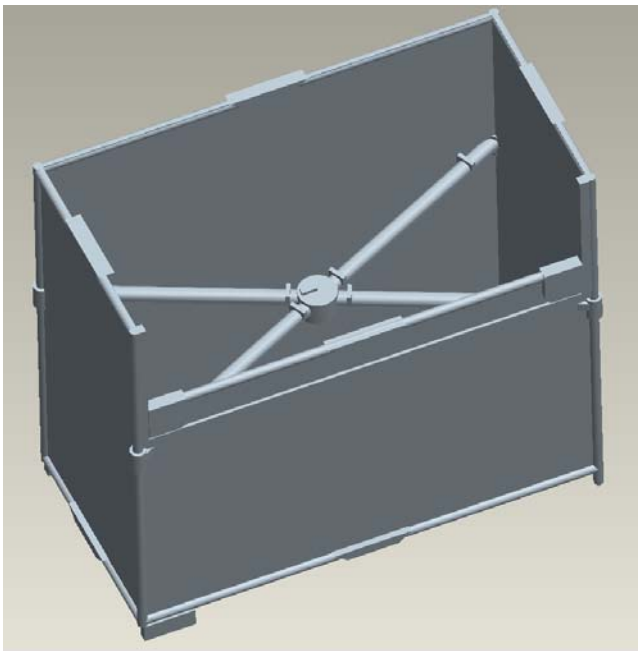

Figure 15: Concept 10 - Mattress Support Mechanism using Cosco Playard®

The nine generated concept designs can be categorized into 3 main groups: the locking mechanism used at the end of the adjustable bar, the track mechanism, and the mattress support. Of the ten concept designs, Figure 11 on page 11 is a representation of the concept that will be used for the locking mechanism at the end of the adjustable bar. Additionally, Figure 12 on page 11 represents our track mechanism for the adjustable wall. Finally, Figure 15 represents the mattress support mechanism that will be implemented in the newly designed bassinet. The following section describes each of our design concepts in more detail.

CRANK

Figure 6 on page 10 shows the crank mechanism in which the one-handed crank controls the height of the wall. The user could raise and lower the wall by using the crank; allowing the user to hold the child with one hand and change the wall height with the other. By making the process easier, this should eliminate the hazards involved with sleeping while the wall is down. When cranked down, the wall would slide vertically along a track and be flush with the child's mattress. We decided against this design because it would implement gears and many moving parts that can make the environment dangerous for children by introducing choking hazards as well as pinching hazards.

CAM

The cam design in Figure 7 on page 10 utilizes a rotating handle at the base of the mattress. This handle can be used with one hand and would allow the user to adjust the wall height while

tending to the child. The wall would swing down to mattress level to allow access to the sleeping area. The cam would call for many moving parts that could be housed in the storage compartment at the bottom of the Co-Sleeper®. Concerns with this design originate with possible choking hazards and the moving parts within the Co-Sleeper®. There would have to be connections between the cam and the bedside wall that would be exposed to the parent using the Co-Sleeper®. The moving parts would collide with the parents bed and bedding, possibly causing damage to the linkage and making the product inoperable. Therefore, this design is not ideal for the needs of the user and the safety of the child.

TOASTER

For the design shown in Figure 9, the user could raise and lower the wall using a push lever, similar to a toaster. Like the crank design, the user could operate the product with one hand while the other is free to care for the child. We decided against this design because there would be many moving parts that would either be exposed or require a bulky housing that interferes with the proximity of the Co-Sleeper® to the bed. Figure 9 shows the vertically moving wall in the down position. Figure 8 on page 11 shows the wall folded outward at a 90° angle into the bed making it less manageable. Both of these designs create more hazards than they eliminate. However, in our final design, we are going to incorporate the straight down sliding motion.

SPRING LOADED PEG

Figures 10 and 11 on page 11 show spring loaded peg mechanisms consisting of several pieces that would act as a locking pin to keep the wall in either the up or down position. This mechanism starts with an end cap on the existing steel frame held together by press fit screws. Another cap is placed over the end cap with a spring separating the two. The peg is located on the end of the outside cap. The spring acts as the force to keep the peg in position while also acting as part of a sliding mechanism where the peg would slide up and down inside a track. In Figure 11, there are holes drilled into the side of the caps. This is to allow a screw through each piece and the frame, as well as, allow the wall to pivot. When the user wants to fold up the Co-Sleeper®, one of the steps is to fold the frame poles completely vertical. During this, the locking mechanism must stay in the up position. The frame poles, those with the end caps on them, pivot around the press fit screws. To retract the peg, the outside caps should be pulled toward the center of the frame, acting against the spring. Then, while holding the two caps, slide the wall up or down. We decided against this design because there were many factors that could create more hazards than solve. The spring and peg created choking hazards if the spring were to somehow get dislodged from inside the caps. The spring could have been too strong and, when the walls were being folded for transport, could have pushed the locking mechanism out of the track. This would cause concerns for ease of use and choking hazards.

TRACK MECHANISM

The track mechanism, which the wall slides and locks in, must be redesigned because the existing track will not fulfill the needs of our new concept. In the current design, since there are many steps involved in taking the wall down, we deemed it hazardous to the safety of the child. Due to the constraints of the cloth material, we decided the wall should slide vertically within a

continuous track to eliminate the step of unlocking the bar in the center due to a two-section track. Figure 12 on page 11 shows a possible track mechanism that would replace the current design and be used with any locking mechanism chosen. This track consists of two pieces that have to be fastened to the current frame of the co-sleeper.

THREE BAR SUPPORT SYSTEM

This support system is intended to support the mattress. Currently, the Co-Sleeper® is only supported by the cloth which does not keep the mattress flat at all times while the wall is moving. To reinforce the mattress, this design includes three steel bars underneath the mattress. As seen in Figure 14 on page 11, these bars are meant to support the areas on the mattress that are creased for the purpose of easily transporting the product. The creases create areas for the child's nose and mouth to be covered and possibly suffocate. This design, however, wouldn't solve all the problems of the mattress. When the wall is sliding the mattress loses its tension and creates hazards. The steel bars would only add more weight to the cloth under the mattress making the area dangerous. Since the Co-Sleeper® is composed mainly of cloth, adding more weight directly to the cloth should be avoided.

MATTRESS SUPPORT SYSTEM

The current mattress support consists of mesh cloth. This is hazardous because during adjustment of the wall, the cloth is no longer taught and creates deflection in the mattress which could lead to suffocation of the child. Due to the fact that this is marketed as a transportable product, the manufacturer designed the mattress pad so it could fold around the Co-Sleeper® to be converted in to a carrying device. The result is three deep creases which cause concern for the sleeping area. One possible solution that our team generated to address this hazard is a system that is already in place in many children's playpens and playards. As seen in Figure 15, it consists of four steel bars that each connect to one of the vertical frame bars. The other end of each bar connects to a base in the middle of the Co-Sleeper® and would be implemented underneath the cloth on the current Co-Sleeper®. Therefore, an area of material must be removed from this cloth to reach the base of the supports. Each bar has two hinges on it allowing it to pivot twice. The base has a handle attached to it that is pulled upward by the user to collapse it for transport. The bars cannot collapse past the horizontal plane due to the design making it a stable, safe sleeping area for the child.

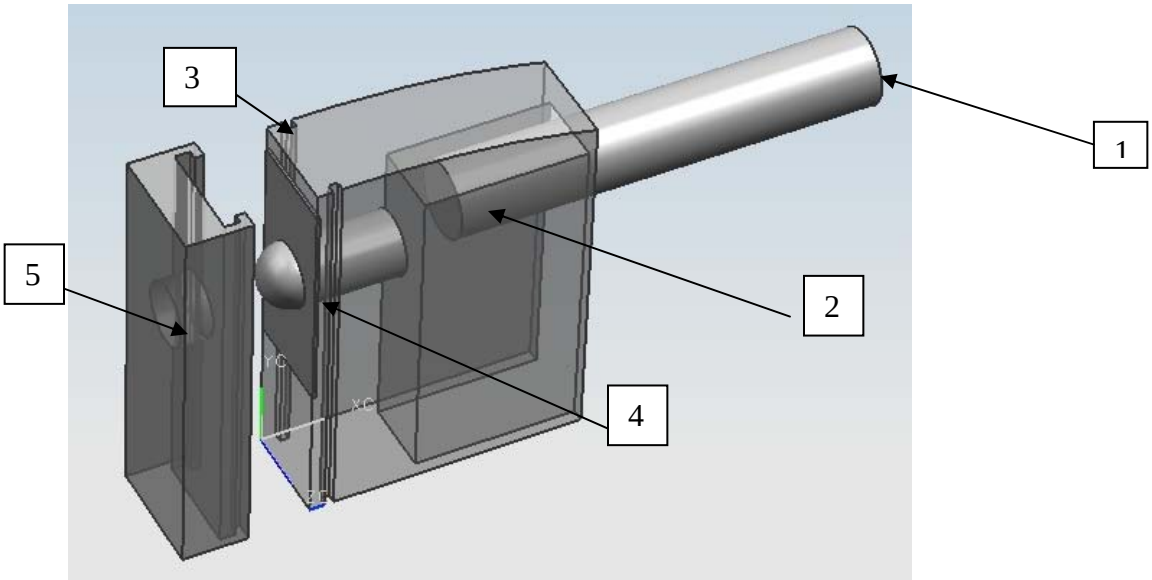

Figure 16: Final Design Concept

CONCEPT EVALUATION AND SELECTION

Our design ideas were narrowed by considering safety hazards and the customer needs. Our goal is to make the product easier to use, therefore eliminating hazards from improper use. When the wall is in the down position, parents' bedding can enter the child's sleeping area creating a suffocation hazard. Therefore, we decided the wall should be in the up position while being used as a Co-Sleeper® bassinet. However, surveyed mothers stated that the product was too difficult to use in the middle of the night when they are tired. To make it easier to use, we had to eliminate the number of steps necessary to adjust the bedside wall height. We chose a slider mechanism so that the parent only had to raise and lower the wall using a track. When the current bedside wall is being adjusted from the up position to the down position, the material that holds the mattress loses its tension and the mattress becomes unstable. This can be hazardous because when the mattress elevates on one side due to the wall adjustment, it can cause the child to roll off their back and possibly suffocate. The Cosco Playard® mattress support is a design taken from popular play pens that are currently on the market. They are proven safe and portable and could support the mattress during adjustment of the wall. The mattress support would be connected to the steel frame of the Co-Sleeper® basinet and would fold up for transport, making it ideal for our prototype.

Evaluation Criteria	Original	Slide Down Crank Wall	Cam Mechanism	Fold out Slat Wall	Slide Down Wall	Peg in Housing	Peg on Bar	Ball Catch Mechanism	Slider Track Mechanism	Mattress Support	Mattress Support w/ PnP
Safety	0	+	-	-	+	+	-	+	+	+	+
Ease of use	0	+	-	+	+	+	+	+	+	-	+
Reliability	0	+	-	-	+	-	-	+	-	+	+
Cost to Manufacturer	0	-	-	+	-	-	-	-	+	-	-
Total (w/weight)		2	0	0	2	0	-2	0	0	1	1

Figure 17: Pugh Chart

The benefits of the Pugh chart include evaluating multiple options against one another and reducing the amount of time necessary to analyze our different designs. We were able to use the Pugh chart to think about both the child's safety and the parents' ease of use by ranking and weighing the critical aspects of our concepts.

SELECTED CONCEPT

The biggest potential hazards we have found are due to the retractable wall. It requires too much effort to adjust and is not always used properly. It needs to be unlocked, removed from the track on each side, placed back on the lower track, locked in place, and then three straps need to be locked so that there is no suffocation threat to the child. We are trying to make the wall easier to adjust so that its advantages can be attained safely. We are looking to slide the wall up and down easily while minimizing hazards. The best mechanism we have found to implement is a ball-catch slider that we purchased at the Home Depot.

The device cannot currently be installed into the coupler because when the Co-Sleeper® collapses for transport, the supporting bar (1) rotates down to be perpendicular to the ground and only allows 1" of clearance between the wall and the pivot point (2). The device has a depth of 1.5." We are going to cut 0.5" off the end of the bar and move the pivot point over 0.5" so that the device can fit.

The grooves (3) in the sides of the coupler will allow it to fit into the track. The spring loaded steel ball (4) will fit into one cavity along the track towards the top when the Co-Sleeper® is in the up position. The wall can be moved between positions by applying a downward force along the coupler. When a force is applied, the spherical ball will compress in and the coupler will slide along the track.

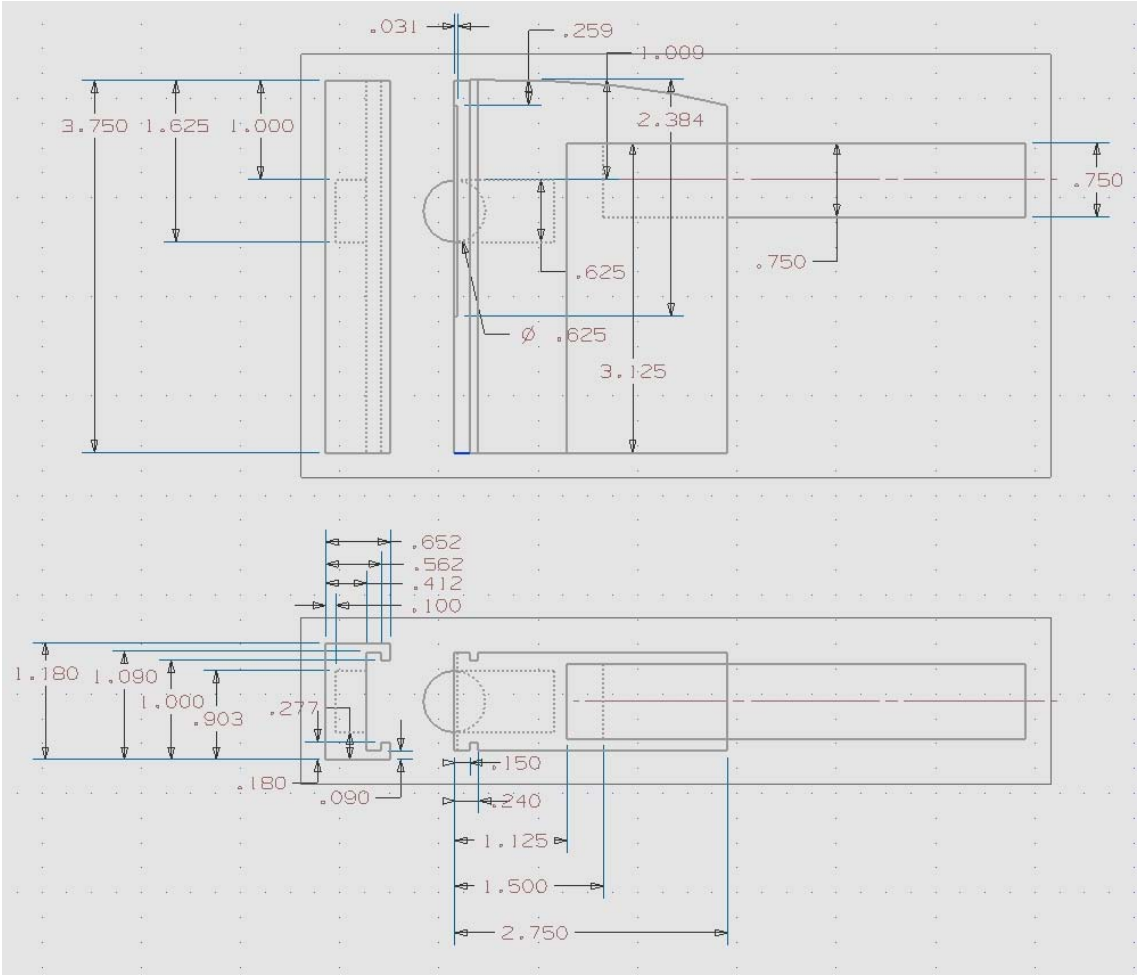

Figure 18: Dimensioned drawing of housing, ball catch, and track

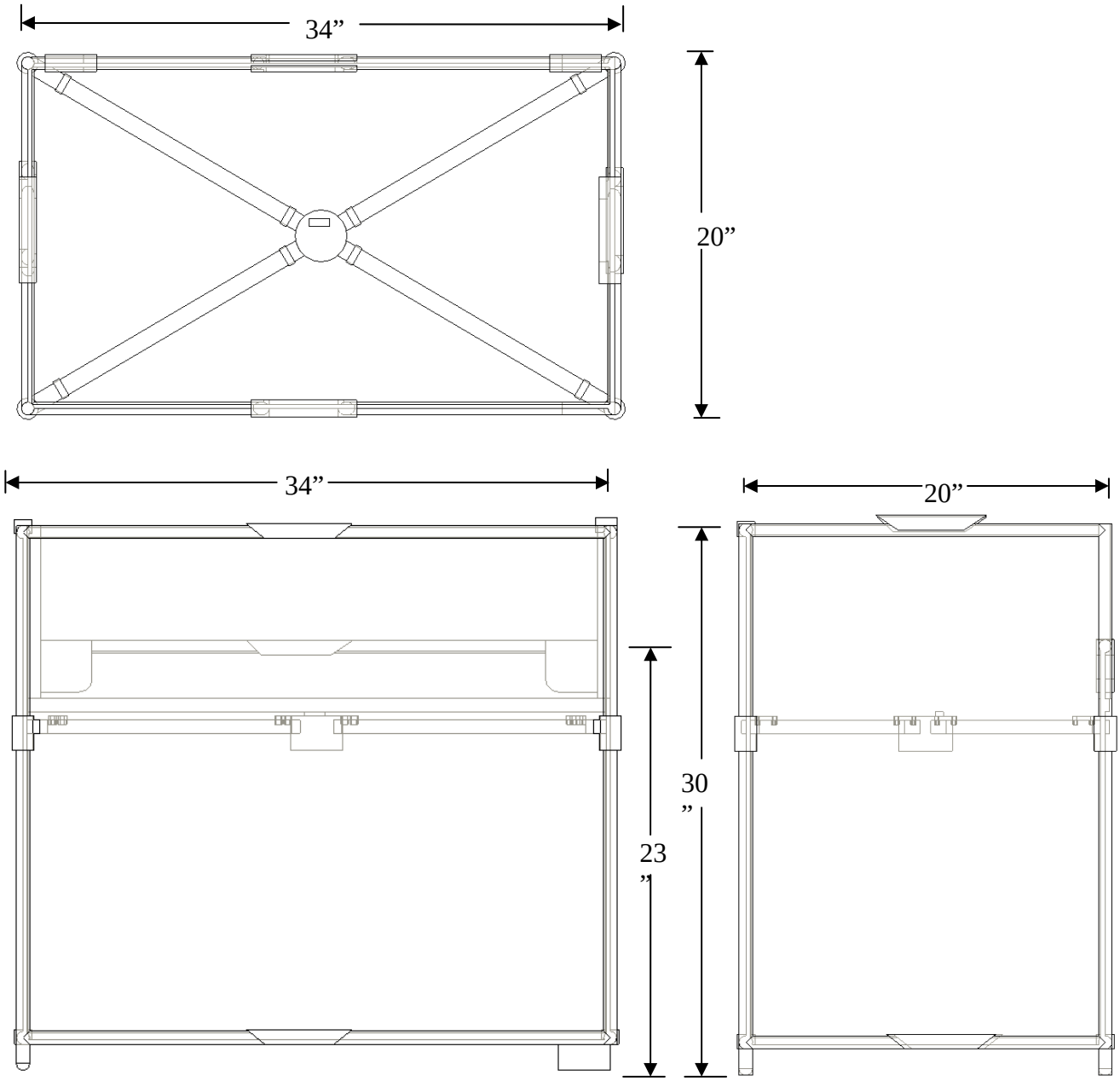

Figure 19: Dimensioned drawing of mattress support

Item #	Item	Material	Quantity	Unit Price ($/in^3)	Price ($)
1	Ball Catch (with screws)	Brass	2	6.47	12.94
2	Housing	Aluminum	12.17 in^3	0.50	6.09
3	Slider Track	Aluminum	2.89 in^3	0.50	1.45
4	Flat Head Rivet	Steel	2	1.00	2.00
5	Playard Mattress Support	Steel Tube	1	42.00	42.00
6	Arms’ Reach Co-Sleeper®	Steel/Plastic	1	140.00	140.00

Figure 20: Bill of Materials

The items listed in the bill of materials are what will be purchased for production of the prototype. Items 1-4 in the Bill of Materials, Figure 20 on page 17, refer to Figure 16 as part of the slider wall mechanism. The housing and slider track will be manufactured by in the machine shop. The flat head rivet will be used as the pivot point for the horizontal bar of the adjustable wall to maintain collapsibility of the product. The ball catch locking mechanism is standard hardware that we bought at the Home Depot. The Cosco Playard® mattress support is a mechanism utilized in a playpen manufactured by Cosco, as well as, Graco Children's Products which will be integrated in to the Arm's Reach Co-Sleeper®.

ENGINEERING ANALYSIS

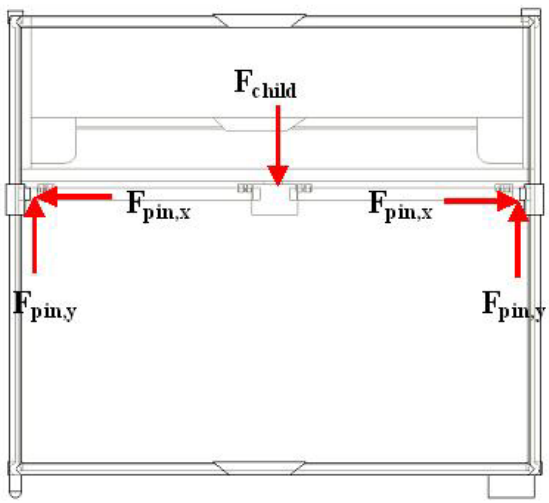

Figure 21: Free body diagram of mattress support system.

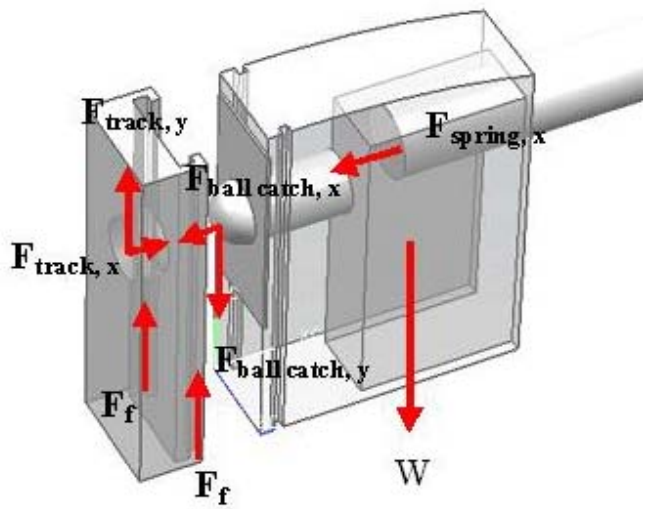

Figure 22: Free body diagram of ball catch mechanism.

Figures 21 and 22 display the free body diagrams of our mattress support system and the ball catch mechanism, respectively. The equilibrium equations for Figure 22 are:

$$\sum F_y = 2 \times F_{friction} + F_{track,y} - F_{ballcatch,y} - W = 0 \qquad \text{(Eq. 1)}$$

$$\sum F_x = F_{track,x} - F_{ballcatch,x} - F_{spring} = 0 \qquad \text{(Eq. 2)}$$

By applying a downward force greater than or equal to 10 lbs a tangential force will be applied on the ball catch by the track. This will compress the spring and allow the ball catch to translate horizontally resulting in the slider being in a non-equilibrium position ready for adjustment.

There were two methods used to determine the estimated deflection of the implemented mattress support, beam analysis and finite element analysis. Both methods revealed that there was a negligible deflection in the mattress support as we had intended for.

BEAM ANALYSIS OF MATTRESS SUPPORT

Beam analysis was conducted for one of the two implemented beams. Each beam of the mattress support was made of steel tubing with an outer diameter of 0.784 inches an inner diameter of 0.75 inches. The weight of the child was distributed over the length of the beam – 39.4 inches - along with the weight of the beam itself. Using the volume of the tubing, along with the density of the steel tubing, we were able to compute the mass of the beam. From this value, the weight of the beam was determined. Both the weight of the beam and the weight of the infant were used to determine the distributed load along the beam. With this, along with the values for the moment of inertia and the modulus of elasticity value and the length of the beam, the deflection at the center of the beam was found. Figure 23 shown below is a diagram of the beam with the applied distributed force.

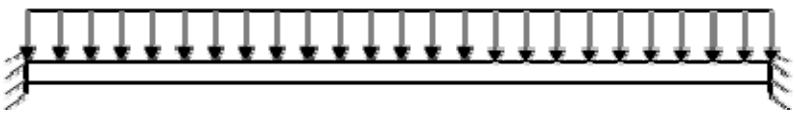

Figure 23: Distributed load applied to a single beam of the mattress support.

The following shows our calculations used to carry out the beam analysis.

$$Volume = l(\pi r_0^2 - \pi r_i^2) = 388{,}000\ mm^3 \quad \text{(Eq. 3)}$$

$$Density\ of\ steel = 7.8 * 10^{-6}\ \frac{kg}{mm^3} \quad \text{(Eq. 4)}$$

$$Mass = Volume \times Density = 3.03\,kg \quad \text{(Eq. 5)}$$

$$Distributed\ Load = \frac{weight}{l} = \frac{3.03 * 9.81}{1001} = 0.0297\ \frac{N}{mm} \quad \text{(Eq. 6)}$$

$$Distributed\ Load\ Due\ to\ Infant = \frac{102}{1001} = 0.102\ \frac{N}{mm} \quad \text{(Eq. 7)}$$

$$Total\ Distributed\ Load = 0.102 + 0.0297 = 0.132\ \frac{N}{mm} = 0.754\ \text{lb/in} \quad \text{(Eq. 8)}$$

$$I = \frac{\pi}{64}(d^4 - d_i^4) = 0.0030 \quad \text{(Eq. 9)}$$

$$Deflection\ at\ Center\ of\ Beam = \frac{5}{384}\frac{Wl^3}{EI} = 0.00664\ in \quad \text{(Eq. 10)}$$

FINITE ELEMENT ANALYSIS FOR MATTRESS SUPPORT

In order to support the value of the deflection found from the beam analysis, finite element analysis was carried out. Using the same distributed load due to the infant, the modulus of

elasticity and the dimensions of the steel tubing, finite element analysis was conducted on the entire mattress support, rather than a single beam of the mattress support as in the beam analysis. Each end of the mattress support is connected to the frame of the bedside sleeper using anchor plates. This was simulated in the finite element analysis through rigid supports at each end. Additional restriction was placed at the center of the support to simulate the center plate that allows the bedside sleeper to be properly stowed away. Figure 24 and Figure 25 below show the hypermesh models used to carry out the finite element analysis. In addition to the determining the deflection of the beam, we were able to generate a picture of the stresses applied throughout the support while the infant was in the bedside sleeper. The model shows that the location of the maximum stress was at the anchor plates.

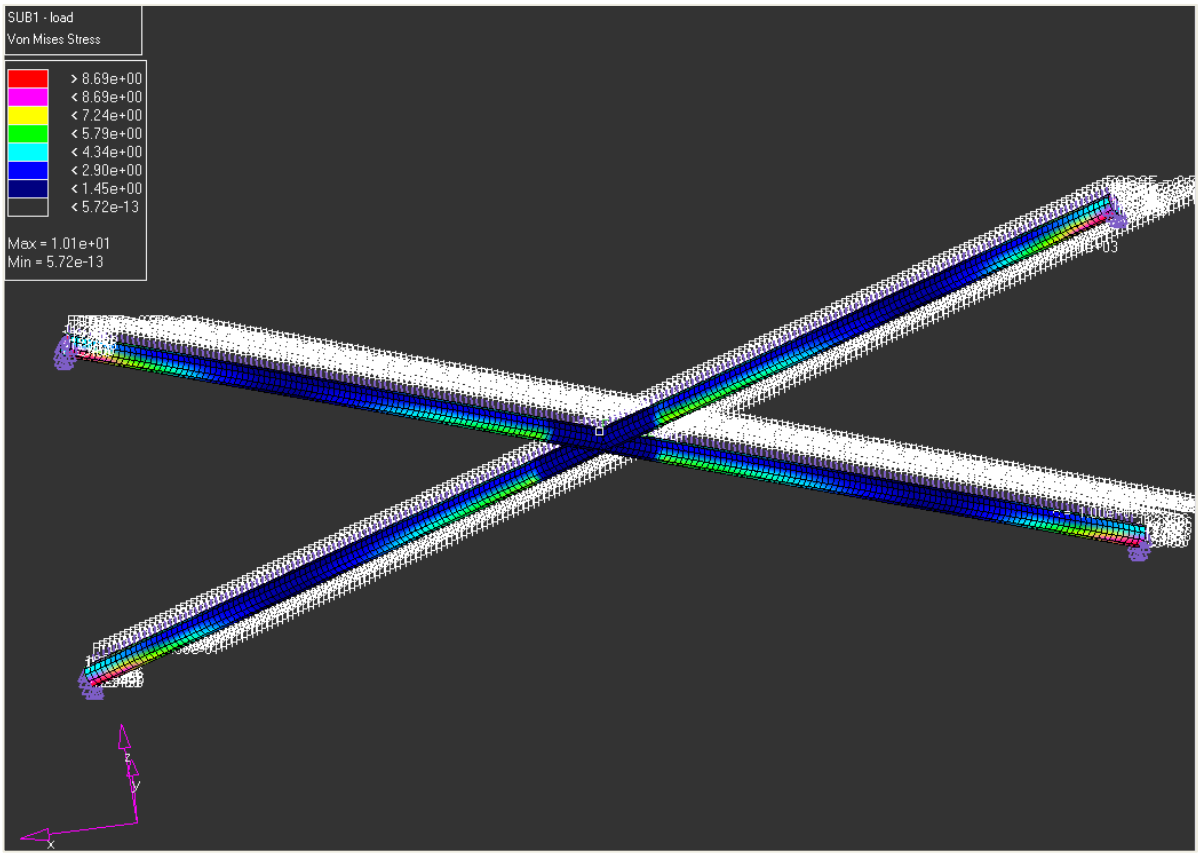

Figure 24: Stresses applied throughout the mattress support. Analysis revealed that the maximum stress was located at the anchor plates.

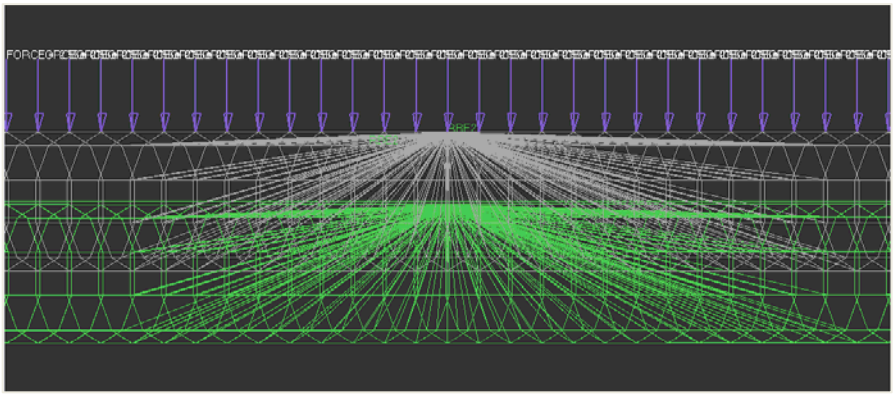

Figure 25: Deflection of the center of the mattress support was shown to be negligible.

Finite Element analysis revealed that the deflection in the mattress support was 0.00563 inches. With such a minimal deflection, the deflection of the mattress was essentially zero and therefore negligible. Thus, the finite element analysis supported the results of the beam analysis.
For our slider/track mechanism, we want tolerances that will allow the slider to easily slide up and down in the track while also creating enough frictional force so that the slider moves at minimal velocity. For the first slider and track that we manufactured, the tolerances are shown below:

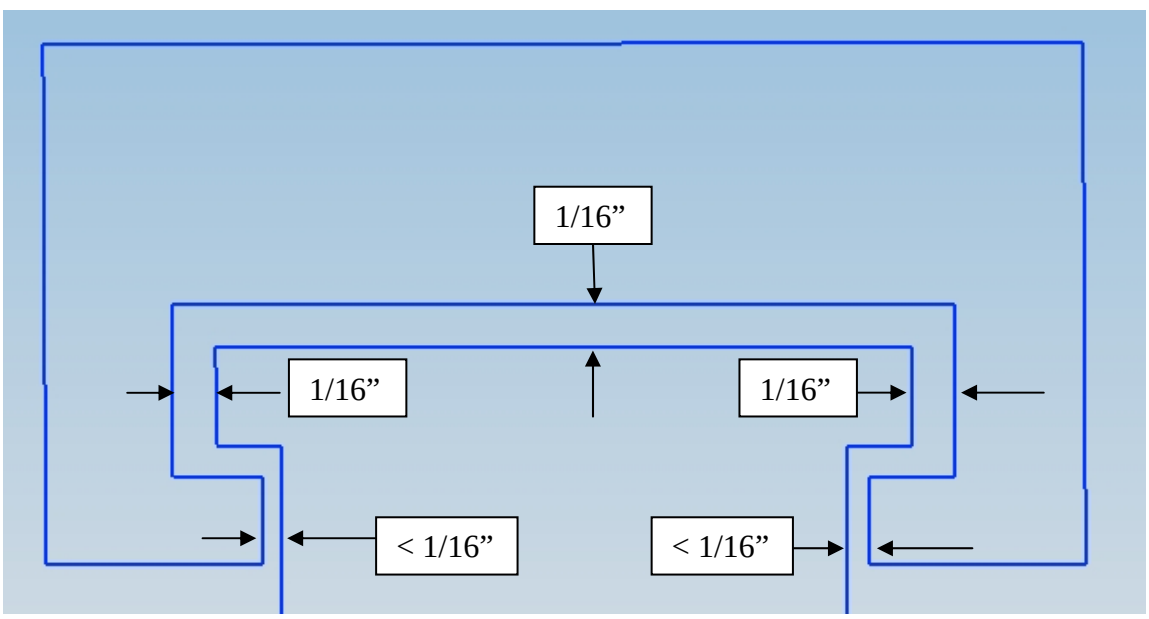

Figure 26: Top view of slider inside track with included tolerances.

Also, for the slider piece, we want the bar that connects the piece to the Co-Sleeper® to easily pivot. For our first slider and track that we manufactured, the tolerance is shown below:

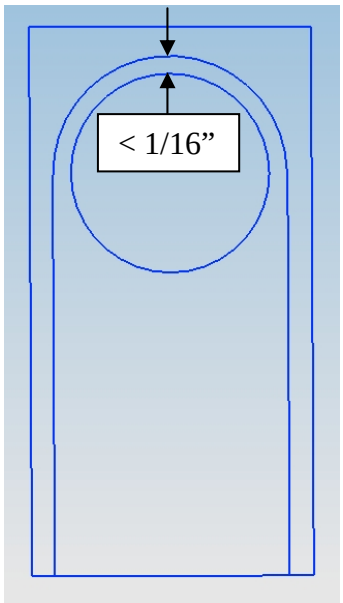

Figure 27: Side view of Co-Sleeper wall frame inside slider housing with included tolerance.

FAILURE MODE AND ELEMENT ANALYSIS (FMEA)

This analysis was performed in order to determine and organize the potential problems associated with our design of the adjustable wall and mattress support for the modified bedside sleeper. While manufacturing the prototype and number of potential problems have risen which have lead us to consider a few testing options. A copy of the generated FMEA chart is shown in Figure 28 below.

Part # & Functions	Potential failure mode	Potential failure effects	SEV	Potential causes Mechanisms of Failure	OCC	Current Designs/Controls Tests	DET	RPN	Actions Recommended
What is the step?	In what ways can the step go wrong?	What is the impact on the customer if the failure mode is not prevented or corrected?	10	What causes the step to go wrong? (i.e., How could the failure mode occur?)	10	What are the existing controls that either prevent the failure mode from occurring or detect it should it occur?	10	**1000**	What are the actions for reducing the occurrence of the cause or for improving its detection? You should provide actions on all high RPNs and on severity ratings of 9 or 10.
Track: Holds slider in place, forms the path for slider to follow, prevents wall from collapsing	Ball catch mechanism failure	Bassinet will fail to function with an adjustable wall	7	A heavy slider will provide too much force on the ball catch mechanism and cause the wall to collapse unintentionally	2	A free body diagram drawn to show how much force is being applied at the location of the ball.	1	**14**	Determine whether the amount of force being applied to the ball is counteracted with enough force to keep the wall stationary. If not, then reduce weight of slider
Slider: Ball catch mechanism works with an ample amount of downward force on the ball to compress it inward and allow the wall to adjust	Ball release failure	Wall of bassinet will not serve purpose of being adjustable	7	A large amount of force, that cannot be supplied by the avg. adult human	2	Force analysis to find out how much force is required to dislodge the ball along with a free body diagram to show how much force is required with the counter acting forces.	1	14	Change the position of the ball accordingly.
Mattress Support: Prevent the mattress from sinking down while adjusting the wall	Mattress support could sink down	Mattress support would be unnecessary	6	The mattress support was not designed to support a sufficient amount of weight	2	Create a free body diagram to determine how much force is necessary to counteract the weight of a 22lb baby; generate a finite element analysis	1	12	Change the material of the mattress support; add additional support to the center OR create rigid attachments at ends

Figure 28: Failure Mode and Element Analysis (FMEA)

One such issue involves the ball catch mechanism we have implemented into the adjustment wall. Though by government standards it is necessary that 10 lbs be required to unlock the ball from one setting and adjust it to another, it is possible that the ball require a greater amount of force than an average human adult is capable of applying. In such a case, the consumer would not be able to utilize the product as intended. In order to prevent this from occurring, it is necessary that a force analysis be conducted to determine how much force is required to release

the ball when the ball is in its original position. If the force analysis determines that a greater amount of weight is necessary to adjust the wall, the ball will be adjusted to reduce this force. A second potential issue is associated with the track that the ball catch mechanism follows when adjusting the wall. A ball catch mechanism that is too heavy could be problematic by allowing for the slider to adjust itself unintentionally. This is very unsafe for a child sleeping in the bassinet, and thus would draw any consumer away from purchasing one. In order to resolve such an issue, it is necessary to draw out a free body diagram to identify how much upward force is required to counteract the downward force of the weight of the ball catch mechanism. With this indentified, a track can be modified/designed to stabilize the mechanism.

A couple of issues could arise with the mattress support as well. Currently, when adjusting the wall from the upmost position to the lowered position, the mattress loses the support necessary to safely carry an infant, prohibiting him/her from staying in the crib while adjusting the wall. To resolve this issue, we have planned to implement a mattress support that remains intact while the wall is adjusted. One potential issue that arises with this is if the support is not rigid, it could deflect as much as the originally designed mattress, thus eliminating the need for additional support. In this case, the bedside sleeper would fail to meet the intended design goal of allowing the wall to be adjusted without removing the baby. A finite element analysis of the support system would determine how far the support would deflect with the estimated amount of weight applied. To eliminate this possibility, additional support could be applied to the center of support to counteract the downward force of the weight applied. Even greater support could be supplied by creating rigid attachments between the mattress supports and the existing vertical support beams.

DESIGN FOR MANUFACTURING AND ASSEMBLY (DFMA)

The mass production of our modified bedside co-sleeper would require a number of processes that are unlike those required to manufacture the prototype. For instance, in order to ensure quality and reduce the cost of the parts while mass producing them at a low cost, the marketable product production would require some injection molding of the mattress' anchor places, the housing for the ball catch mechanism, the track, and the center support plate. These molds will be created using molds with minimal, but uniform thickness, and include rounded interior edges that will be easy to manufacture and also create pieces that are shaped to ensure safety for infants.

When mass producing our bassinet, we plan to use standard sizes for all attachment bolts and screws, and standard dimensions to ensure that all parts used are easily accessible and cost efficient. Additionally, we plan to use standard sized drill bits and cutting tools that generate intended rounded edges and then. All holes will be generated at a 90 degree angle in reference to the top surface of the materials to ensure easy manufacturing and materials will be cut down to create an angled surface if necessary. All manufacturing will require using only a mill, drill press and band saw – machines that are readily available and require minimal hands-on assistance.

Our use of the ball catch mechanism will be purchased and inserted into an injection molded housing. The symmetrical ball catch mechanism allows for it to be oriented so that it can be

assembled in 2 possible orientations, aligning the bolts to fit in the holes of the generated housing. Additionally, the mattress support is designed with pin joints at all four ends with identical pin sizes so that they can be oriented in two possible ways, with two long ends and two short ends.

In order to facilitate the assembly of the bedside co-sleeper, the mechanisms will be generated with minimal parts. For instance, since the ball catch mechanism is purchased assembled, it is not necessary to detach the internal spring in order to assemble the ball catch mechanism and the housing that contains it. Instead, it is necessary to attach it using bolts at open spaces. All bolts that need to be attached will be done so externally and then covered or inserted to an internal body if necessary.

All parts which require screws will be generated with a sufficient amount of space in order to allow enough space for easy access of drills and screwdrivers where necessary, by requiring all parts to be assembled externally.

DESIGN FOR ENVIRONMENT

The addition of the slider mechanism will increase the products shared use. The new product will be less susceptible to failures and so it can be passed on after being used. This addition is providing a service to mothers. It is allowing them to tend their children while lying next to them by simply moving a bar up and down.

Our slider addition will lessen the chance for the product to break and thus increase its reliability. The addition will allow the wall to adjust easily thus optimize the main function of the product. Mothers will use the product for its intended purpose more which would develop a stronger user-product relationship.

The slider mechanism will be injection molded from the same material as the current mechanism. The slider mechanism could be made from recycled plastic, but we recommend that it be made from virgin plastic to give better performance. The Cosco Playard® support system will be made from extruded steel tubes.

The slider mechanism will be injection molded like the current mechanism is. It will attach in the same manner to the co-sleeper. The only additional production step will be the attachment of the ball catch. There will need to be additional production steps to manufacture and install the support system.

Since the new product will be more reliable, there will be a smaller chance that the product will fail. Thus, the probability that the product will be re-used for other children will increase. Also, the addition of the Cosco Playard® will increase the lifetime of the product. Since more weight can be supported, the product can be used for heavier children.

FINAL DESIGN

Figure 29 below is what the adjustable wall will look like when the slider mechanisms are attached at each end. The dimensions for the slider and track pieces are in Figure 18.

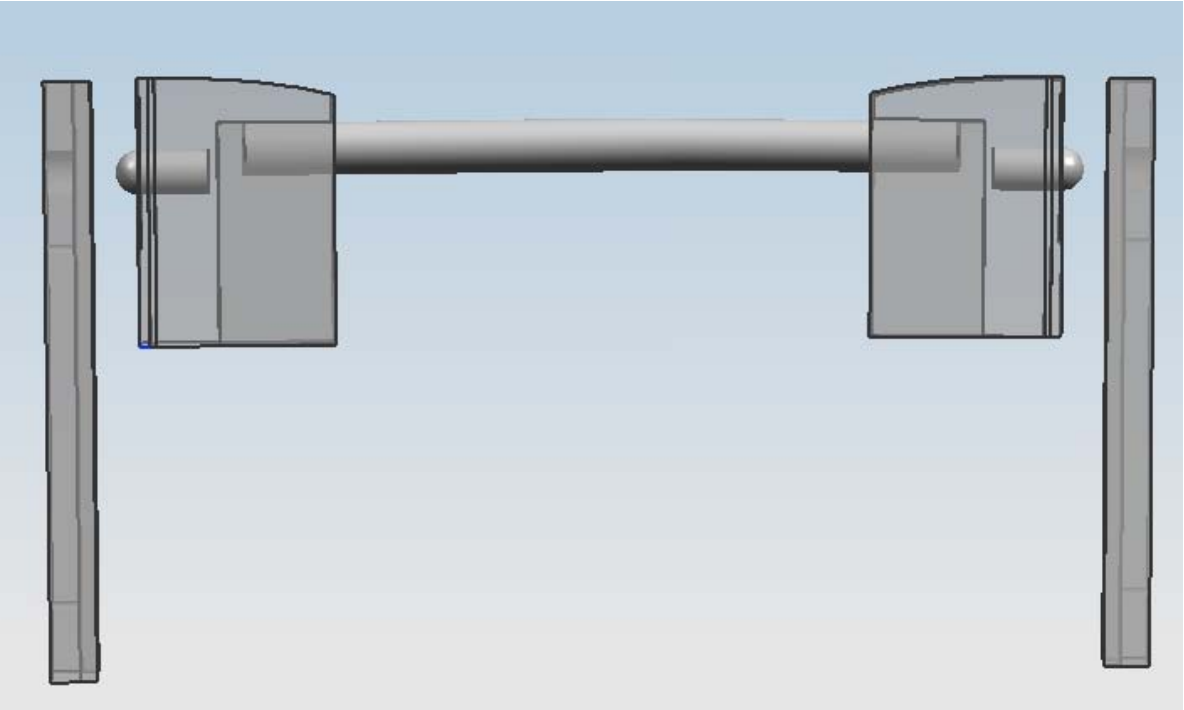

Figure 29: Front view of ball catch mechanism in the housing.

Figure 30 on page 28 is a schematic of how the current dimensions of the Cosco Playard® lines up with the Arm's Reach Co-Sleeper®. Figure 30 below illustrates the need for different anchor plates to secure the Playard® in our prototype. We will have two pieces like Figure 30 that will allow the support system to fit directly into two (1 and 2 in Figure 30) corners of the Co-Sleeper®. Since the Playard® does not have the same dimensions as the Co-Sleeper®, the opposite two corners of the support system (3 and 4 in Figure 30) will not overlap the corners of the co-sleeper. We will cut the bars using a hacksaw where they intersect the co-sleeper and manufacture two pieces like Figure 31 below to attach them to the co-sleeper. However, as stated above, these anchor plates are for use on the prototype, not the mass produced product.

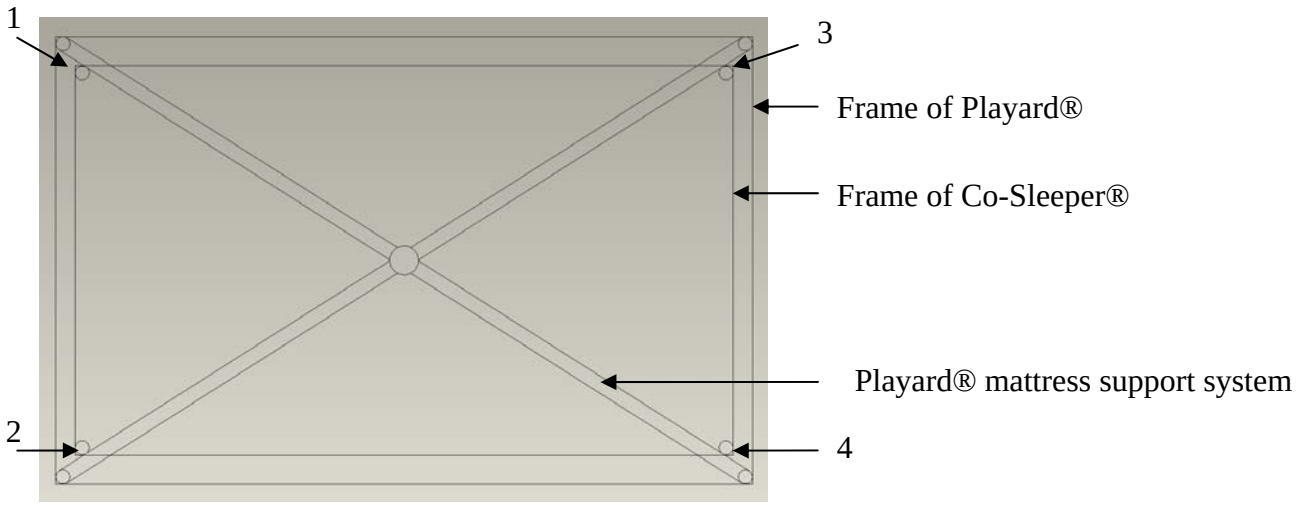

Figure 30: Schematic of Cosco Playard® on top of Co-Sleeper®.

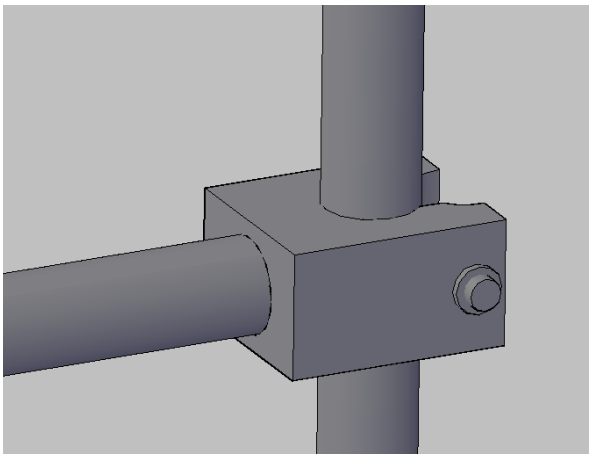

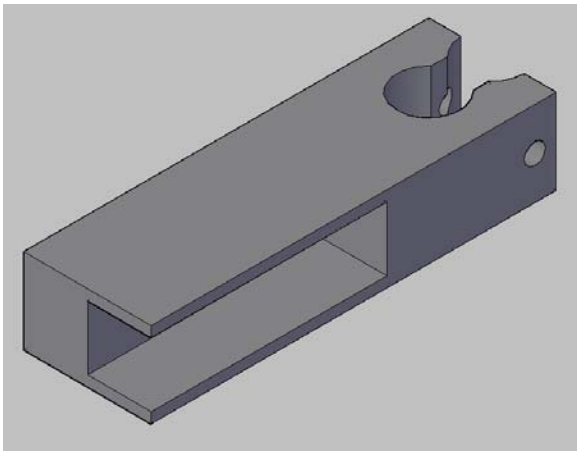

Figure 31: Attachments for corners 1 and 2 **Figure 32: Attachments for corners 3 and 4**

MANUFACTURING AND TESTING PLAN

The slider mechanism of our prototype will be manufactured in the machine shop and will be made from aluminum stock. The ball-catch pieces were bought from the Home Depot and will be inserted into the sliders once they are machined. Manufacturing processes for the slider and track are below in Figure 33 on page 27:

Slider			
Step	**Process**	**Machine (s)**	**Drill/Mill/Tap Size**
1	Cut aluminum stock to 3.75"x2.75"x1"	Ban saw	
2	Plane to 3.5"x2.5"x1"	Mill	3/4"
3	Mill 1" wide rectangular slot for ball-catch to fit in	Mill	3/4"
4	Drill center hole in slot for ball-catch to fit in	Drill Press	5/8"
5	Drill upper and lower holes in slot for bolts to fit in	Drill Press	
6	Countersink bolt holes	Drill Press	80° Chamfer bit
7	Tap bolt holes	Tap	6-32'
8	Bolt ball-catch into slot	Flathead Screwdriver	
9	Mill slots on each side to allow mechanism to slide	Mill	3/16"
10	Mill slot in rear for attaching bar to rotate through	Mill	3/4"
11	Drill hole through top of slot to fit pin through	Drill Press	1/4"
Track			
Step	**Process**	**Machine (s)**	**Drill or Tap Size**
1	Cut aluminum stock to 10"x2"x0.75"	Ban saw	
2	Plane to 9.75"x1.5"x0.75"	Mill	3/4"
3	Mill 3/8" deep center slot along long direction of track	Mill	7/8"
4	Mill 1" slot in center of track for slider to fit in	Mill	1/8" key cutter
5	Drill hole in top for ball to fit into	Drill Press	5/8"
6	Drill 2 holes for bolts to connect to co-sleeper	Drill Press	1/4"
7	Countersink bolt holes	Drill Press	80° Chamfer bit

Figure 33: Manufacturing process for the slider and track mechanisms, respectively.

The old PVC tracks will be removed from the Co-Sleeper® with a hammer and chisel. The new tracks will be bolted to the Co-Sleeper® frame where the old tracks were located. The bars on the Co-Sleeper® will be cut with a hack saw to the appropriate size and pinned into the sliders. Once both ends of the slider mechanism are attached, we will begin testing the strength of the new wall. To satisfy standards, the wall needs to require at least 10 pounds of force to release.

PROJECT PLAN

Our schedule is summarized as a Gantt chart in Appendix B on page 35. The first part of our plan is to determine the most likely hazards associated with co-sleeping. Then we will make several designs avoiding these hazards from which we will select one to build our prototype. We anticipated a budget of *roughly* $200. This includes $140.00 for an Arms' Reach mini Co-Sleeper® stand-alone unit, $42.00 for the Cosco Playard® and $18 for our additions to minimize hazards. The area we will be needing technical assistance and use of funds is on our prototype. Some of our possible additions include metals and we would be needing assistance in the

machine shop to construct these additions. After completing our prototype, we have stayed within our anticipated budget of $200, with the exception of possibly shipping our prototype to our sponsor.

RECOMMENDED GOVERNMENT STANDARDS

Although bedside sleeper products are already on the market, they currently have no safety standards that must be met. Products such as cribs have mandatory standards set by the government that must be met in order for the product to be put on the market. There are also voluntary standards that are recommended to be met. These standards are determined through testing, as well as resulting from accidents that occur in the products. The U.S. Consumer Product Safety Commission is the government agency in charge of protecting consumers from dangerous products. The CPSC investigates the hazards of anything from toys to household items and chemicals. The American Society for Testing and Materials (ASTM) is one of the largest voluntary standards development organizations in the world. The ASTM issues voluntary standards that they recommend are met for products ranging from materials to products. The CPSC sets the mandatory standards while the ASTM sets voluntary standards for products such as cribs. Using these agencies, our goal was to determine standards that bedside sleepers should meet in order to be safer products and prevent injury to consumers. Using articles 16 C.F.R. 1508 and 1509 of the CPSC, as well as ASTM F standards 966, 1169, and 1822, we were able to determine these mandatory standards:

- Distance from mattress to top of adjustable wall should be at least 10”.
- Distance from mattress to top of adjustable wall at minimum height should be at least 3”.
- There should be no slats or spindles on the bedside adjacent wall.
- Wall release must require either two distinct actions, or at least 10 lbs. of force to release from locked position.
- When used as a co-sleeper bassinet, the distance between the parental bed and the sleeper should not exceed ½”.
- The space between the inner perimeter of the crib and the mattress should be no greater than ½”
- Mattress support systems must have zero deflection.
- Products should have a smooth finish and be free of sharp edges.

Bedside sleepers such as the Arms Reach Co-Sleeper have an elevated mattress that typically lies about 20 inches or more above the floor. We found that the distance from that mattress and the adjustable wall at its highest position should be at least 10 inches so that a child cannot reach the locking mechanism to trigger the wall to move or fold. Likewise, the distance from the mattress to the top of the adjustable wall in its lowest locked position should be at least 3 inches. This is to prevent the child from reaching the locking mechanism and to keep the child from rolling towards the gap between the bed and the sleeper. Since the bedside sleeper could be used as a co-sleeper, there should be no slats or spindles on the adjacent wall to the bed. This is because if the child can reach the wall, then the child can reach through the slats or spindles and get pinched between the two objects. Similar to full-size and non-full-size cribs, the wall should require either two distinct actions or at least 10 pounds of force to release from the locked

position. When used as a co-sleeper bassinet the distance between the parents' bed and the sleeper should not exceed ½ inch to prevent the bedside sleeper from deflecting away from the parents' bed and creating a larger gap. Similar to cribs, the space between the inner perimeter of the crib and the mattress should not exceed ½ inch. Mattress support systems, whether made of extruded steel or fabric, should not deflect at all. Finally, similar to all children's products, the bedside sleepers should have a smooth finish and be free of sharp edges.

Unfortunately, many hazards are only identified only after a tragedy has occurred. Many of these instances could have been avoided had proper testing been done, instructions had been easy to interpret, and products were easier to use. If products are too difficult to use, then it is more likely that the product will be used incorrectly creating a hazardous situation. One way to prevent this is to educate consumers about these dangers and eliminate possible hazards. With that in mind, revised assembly instructions for the Arms Reach Mini Co-Sleeper® are available in Appendix C on page 36.

CONCLUSIONS

Children's products can be very hazardous and should be required to meet U.S. CPSC and ASTM standards before being placed on the market. However, even those products that do reach the market can be used improperly by consumers. Eliminating every hazard from a product will not happen if the product is used improperly. To reduce hazards, the consumer must be fully aware of the dangers of the products they use. We began our study of bedside sleepers with research of current standards for children's products. After analyzing the hazards of bedside sleepers, we were able to determine standards that must be met before the products can reach the market. With those standards in mind, we modified an existing bedside sleeper to be a safer product. The Arms Reach Co-Sleeper was an ideal choice to modify since it is one of the leading manufacturers of bedside sleepers in today's market. With manufacturing of our prototype completed, we have stayed within our budget goal of $200.

With our research, we hope that government officials, as well as manufacturers, will take an interest in our results. We hope that tragedies will occur less often in children's products as the government takes the steps to make them safer. We thank our sponsor, Kid's In Danger and Nancy Cowles for making this project possible, and giving us this opportunity to learn so much about these products and the dangers of using them.

REFERENCES

[1] "Babies Sleeping with Parents: Case-Control Study of Factors Influencing the Risk of the Sudden Infant Death Syndrome." British Medical Journal. 23 Sept. 2007 <http://www.pubmedcentral.nih.gov/articlerender.fcgi?tool=pubmed&pubmedid=10582925>.

[2] "Code of Ethics." National Society of Professional Engineers. 21 Sept. 2007 <http://www.nspe.org/ethics/eh1-code.asp>.

[3] "Requirements for Non-Full-Size Baby Cribs." U.S. Consumer Product Safety Commission. 21 Sept. 2007 <http://www.cpsc.gov/businfo/regsumcrib.pdf>.

[4] Arms Reach Co-Sleeper. 20 Sept. 2007 <http://armsreach.com/>.

[5] "Standard Consumer Safety Specifications for Non-Full-Size Baby Cribs, F 1822-97." American Society of Testing and Materials. 21 Sept. 2007 <www.astm.com>.

[6] "1 Million Chinese-Made Cribs Recalled." CNNMoney. 22 Sept. 2007 <http://money.cnn.com/2007/09/21/news/crib_recall/index.htm?cnn=yes>.

[7] Kalpajian, Serope, and Steven R. Schmid. Manufacturing Processes for Engineering Materials. Upper Saddle River, NJ: Prentice Hall, 2003.

BIOS

Eileen Clemens was born in Pittsburgh, Pennsylvania and was raised in Royal Oak, Michigan. She is the youngest of 6, and the only child with brown eyes. She currently lives with her oldest sister, Erin, and Erin's husband and three children. She has 8 nieces and nephews. They live in South Lyon, Michigan, and she commutes to school every day. She has seven nieces and one nephew. Her siblings are Erin, Erica, Jeremy, Josh, and Elizabeth. She grew up playing baseball, basketball, and soccer. During high school she played varsity softball and basketball. Now, she plays IM sports and coach's baseball and softball. She first began to like mechanical engineering when she first understood cars. However, she soon realized that mechanical engineers do more than just automotive, and that is why she is in mechanical today.

Neha Dhawan is a Mechanical Engineering senior from West Bloomfield, MI who will be graduating from the University of Michigan in December 2007. Her strong interest in Mechanical Engineering developed while working on Science Olympiad projects throughout High School and competing against other schools. Starting her sophomore year at Michigan she developed an interest in Biomedical Engineering while working in the ECMO Artificial Lung Lab where she designed and tested artificial lungs housings. Thus, she plans to further her education and pursue a master's degree in the field of Biomedical Engineering upon graduation. Outside of school, she enjoys traveling, and playing tennis.

Larisa Ensign is a Mechanical Engineering senior from Shelby Twp., MI. She has interned at Cirrus Design in Duluth, MN as a manufacturing engineer for single engine aircrafts. Upon graduation she plans to move to California and pursue an exciting career in manufacturing and design. In her free time she enjoys travelling and scuba diving.

John Philiou Powers was raised in Solon, a suburb on the Southeast side of Cleveland. He once heard someone refer to Mechanical Engineering as Miscellaneous Engineering. To him, Mechanical Engineering seems to be one of the more fundamental of engineering disciplines. He says that "we study courses from very different fields that give us a large base of general knowledge." This is appealing to him because he is not certain of what he wants to do. He likes Mechanical Engineering because he feels that it has prepared him for a wide range of tasks. He is thinking of applying to graduate school for engineering or to law school. He likes building things and playing basketball.

APPENDIX A

Quality Function Development (QFD)

Relationships

++	Strong Positive
+	Medium Positive
-	Medium Negative
	Strong Negative

(+) => more is better
(-) => less is better

	Weight*	wall height	Meets force standards	mattress area	distance gap from bed	mattress firmness	material	hardware	assembly	Number of walls	fatigue strength	yield strength	Total Weight	Benchmarks: *arm's reach mini classic bassinet*	*arm's reach co-sleeper sleigh bed*
Mobility	6							9					3	4	4
Storage compartments	2						3						3	5	1
Accomodating larger age range	2	3	9	3							9	9		2	3
Proximity to parent	9				9					1				5	5
Adjustable Leg height	9		9				9	3	3					5	1
Safe from pet entrance	4	3								3				2	2
Collapsibility	6		9					3	9					5	1
Multi-purpose (playpen, bench, etc.)	1		9					1	3	9				3	4
Ease of use	9				9			9	9	9				2	2
Ease of assembly	10							3	9					3	3
Divider Wall (between co-sleeper and bed)	8	9	9				9	9	9	9				5	5
Locking device safety	9		9				9	9	9		9	9		2	5
aesthetically pleasing	4						9	1						4	5
affordable	5			1			9	9	3					4	2
Durable	4		9				9	9	3		9	9		2	4
Safe from SIDS	8	9		3	9	9	1			9				3	3
Accomodating multiple children	5		9	9										1	5
Measurement Unit		m	lb	m^2	m	b/m^	#	#	#	#	GPa	GPa	lb		
Target Value		0.1	10	0.4	0.1	0.1	#	#	#	#	#	#	20		
Importance Rating		8	10	5	9	10	6	8	9	8	10	10	5		
Total		162	243	87	189	81	96	544	471	192	18	180	24		
Normalized		0.07	0.11	0.04	0.08	0.04	0.04	0.24	0.21	0.08	0.01	0.08	0.01		

Key:
9 => Strong Relationship
3 => Medium Relationship
1 => Small Relationship
(blank) => Not Related

***Weights are figured on a scale of 1 to 10**
(ten being most important)

APPENDIX B


ID
Task Name
Sep 16, '07
Sep 23, '07
Sep 30, '07
Oct 7, '07
Oct 14, '07
Oct 21, '07
Oct 28, '07
Nov 4, '07
Nov 11, '07
Nov 18, '07
Nov 25, '07
Dec 2, '07
Dec 9, '07
1 Design Review 1 Tasks
2 Research Current Co-Sleeper Designs
3 Meeting Gantt Weber
4 Brainstorm Co-Sleeper Prototype Designs
5 Customer Preference Survey
6 Rough Draft For Design Review 1
7 Final Draft For Design Review 1
8 Presentation Slides For Design Review 1
9 Design Review 2 Tasks
10 Meeting Gantt Weber/Nancy Cowles
11 Generate Sketches
12 Analyze Sketches
13 Finalize Sketch
14 Begin CAD Drawings
15 Rough Draft For Design Review 2
16 Final Draft For Design Review 2
17 Presentation Slides For Design Review 2
18 Design Review 3 Tasks
19 Meeting Gantt Weber/Nancy Cowles
20 Analyze Materials Used In Co-Sleepers
21 Force Diagrams of Current & New Models
22 ADAMS Model of New Model
23 Create Prototype
24 Rough Draft For Design Review 3
25 Final Draft For Design Review 3
26 Presentation Slides For Design Review 3
27 Design Review 4 Tasks
28 Meeting Gantt Weber/Nancy Cowles
29 Create Prototype
30 Rough Draft For Design Review 4
31 Final Draft For Design Review 4
32 Presentation Slides For Design Review 4
33 Design EXPO
34 Meeting Gantt Weber/Nancy Cowles
35 Design Expo Preparation
36 Design EXPO
37 FINAL REPORT
38 Rough Draft
39 Final Draft

APPENDIX C

UPDATED MINI CO-SLEEPER® ASSEMBLY INSTRUCTIONS

Follow the instructions/photos below to properly assemble your Mini Co-Sleeper® with newly implemented mattress support system.

1. Pull the Co-Sleeper® out of the box.
2. Lay the Co-Sleeper® down with the handle facing up.
3. Unzip the nylon carrying bag and remove it.
4. Unfasten the velcro straps that are attached to the mattress and remove the mattress from the Co-Sleeper®.
5. Remove the assembly instructions and the plastic bag that contains the sheet and strap & plate.
6. Lift the Co-Sleeper® by the plastic corners to an upright position.
7. Spread the bottom legs apart with your foot while pulling the top sides of the Co-Sleeper® apart.
8. Lock the top bars by pulling up on the center of each bar. (Please note: There are two locking mechanisms on each top bar. Sometimes you need to pull it up quickly to get both mechanisms to lock securely.)
9. Repeat this process on all three remaining bars.
10. Now that all the top bars are locked, lock the bottom support bars by pushing down on the center of each bottom bar. You can do this with your hand or foot. Make sure all bottom bars are secure.
11. Push down on center plate of mattress support system until bars “click” and lock into position.
12. Open the plastic bag that contains the sheet and attach it to the mattress.
13. Make sure the sheet is secure to the mattress by securing the four velcro strips that are located on the inside of the sheet to the mattress.
14. Lay the mattress inside the sleeping nest and align it along the velcro strips that match the outside of the sheet. Insert the straps on the bottom of the mattress through the holes on the of the sleeping nest. Attach the straps to the velcro on the top of the storage compartment underneath the sleeping nest.
15. Attach the strap & plate from your bed and connect it to the Co-Sleeper® through the belt loop located on the side of the unit.
16. The unit is now in co-sleeping position.

Before putting your infant into the unit, check to make sure the unit is in the proper co-sleeper position. Make sure all the top bars and the bottom support bars are locked.

HELPFUL HINT

All the top bars need to be locked before locking any of the bottom support bars. If you have locked the bottom bars first, the locking mechanism in the unit will not allow you to continue locking all the top bars.

CONVERTING TO BASSINET

1. With one hand, grip the center of the bedside adjustable wall and apply force straight down to release locking mechanism. Or, with two hands, grip both ends of the bar and apply force straight down.
2. Push wall down into lowest position.
3. To raise wall, with two hands, evenly apply upward force underneath both ends of the bar.
4. Pull upward until bars lock into place.

FOLDING DOWN THE CO-SLEEPER®

1. Remove the mattress from the unit and remove the sheet.
2. With your hand or foot, unlock the bottom support bars by pulling up on the center of the bar into an upsidedown "V" as high as it can go.
3. Release the locked mattress support by pulling upward on the handle on the center plate until the bars fold up.
4. Unlock the top bars by wrapping your hands around the center of the bar and locating the locking mechanism with your thumbs. Push in on the buttons and gently pull up, then push down. By doing this correctly the bars will release into a "U" position.
5. Gather the co-sleeper together. It should collapse down into a rectangular position with the legs sticking out. Lay the co-sleeper on its side and stand over the co-sleeper facing the legs. Push down on the legs with a little pressure until you hear a click. The co-sleeper will then breakdown.
6. Wrap the mattress around the unit and feed the velcro straps through the plastic loops that are attached to the other side of the mattress. Pull and secure the velcro straps.
7. Store the sheet and the strap & plate in the top end of the co-sleeper.
8. Put the co-sleeper into the carrying bag with the handle from the mattress coming through the opening of the bag.
9. The co-sleeper is now in travel position or can be stored away.